Borough of Naugatuck Wastewater Treatment and Incineration Facilities

Planning Level Analysis for Proposed Improvements

December 22, 2009

Prepared by

Alternative Resources, Inc.
1732 Main Street
Concord, Massachusetts 01742

1201-3

Table of Contents

Executive Summary

Section A: Grit Chamber – Planning Level Analysis

Section B: Bar Rack – Planning Level Analysis

Section C: Phosphorus Removal – Planning Level Analysis

Section D: Preliminary Analysis of Mercury Control Options for Naugatuck Sewage Sludge Incinerator

Section E: Preliminary Planning Level Analysis – WPCA Budget Projections

Alternative Resources, Inc.

Corporate Headquarters

1732 Main Street
Concord, MA 01742
Tel (978) 371-2054
Fax (978) 371-7269

www.alt-res.com

MEMORANDUM

1201-1

TO: Jim Stewart (Borough)

cc: Jon Hoisak (Veolia)
John Batorski (Veolia)
Jim Binder (ARI)

FROM: Kathleen A. Luvisi

DATE: December 22, 2009

SUBJECT: **Summary – Planning Level Analysis for Various Improvements to the Wastewater Treatment Plant and Incineration Facilities**

As a result of a draft Consent Order received for mercury control of incinerator stack emissions (July 2009) and the expectation of a new, draft NPDES permit that will contain requirements for installation of a bar rack and grit chamber as part of headworks improvements, and phosphorus removal, the Borough has requested that ARI prepare a planning level analysis of the costs of these potential improvements to the Wastewater Treatment Plant and Sludge Incinerator. The Borough also requested that the cost of repairs to the sanitary sewer collection system be included in the analysis. The potential costs for these improvements are substantial, with the result that plans for financing are essential. This report presents the results of the requested analyses.

The Borough also requested that the cost of repairs to the sanitary sewer collection system be included in the long term analysis.

It is important to plan for the long term capital needs of the Borough. When the NPDES Permit is issued in final form, and the draft Consent Order for Mercury Emissions is issued in final form, the Borough will be required to design and construct additional treatment processes at the Wastewater Treatment Plant and Incineration Facilities.

ARI has prepared planning level analyses for the following improvements to the Wastewater Treatment Plant and Incineration Facilities:

- Grit Chamber at Wastewater Treatment Plant
- Bar Rack at Wastewater Treatment Plant
- Phosphorus Removal from Wastewater Effluent
- Mercury Control for Incinerator Air Emissions
- Repairs to Borough Sanitary Sewer Collection System

The planning level analyses included a brief discussion of the available technologies, a summary of product information from vendors, and a planning level cost estimate for the design, construction, and installation of the equipment. As stated above, at the request of the Borough, the cost of repairs to the Borough Sanitary Sewer Collection System (prepared by others) was also added to the planning level cost estimate.

ARI has prepared a preliminary budgetary analysis of the effect of these improvements on the WPCA Budget for the years FY2010 through FY2014.

Each of the improvements is briefly discussed below, with details provided in Sections A through D of this report. The preliminary WPCA Budget Analysis is attached in full in Section E.

Grit Chamber (Section A)

It is anticipated that the installation of a grit chamber at the WWTP will be required in the draft NPDES Permit which is expected to be issued by the CT DEP in the near future. The grit chamber would be installed, together with the bar rack, in a new headworks structure. ARI obtained a price quotation of $145,000 in 2009 dollars from the Smith and Loveless Company for the PISTA GRIT System.

Bar Rack (Section B)

It is anticipated that the installation of a bar rack at the WWTP will be required in the draft NPDES Permit. The bar rack would be installed, together with the grit chamber, in a new headworks structure. ARI obtained a price quotation of $115,000 in 2009 dollars from Enviro-Care for the Flo-Screen equipment.

New Wet Well and Headworks

The grit chamber and bar rack will be installed in a newly constructed wet well and headworks chamber. The concrete chamber would be constructed below ground at the elevation of the main influent sewer which enters the treatment plant. The estimated cost of the new wet well and headworks chamber is $1,000,000 in 2009 dollars. This includes the cost of installing the grit chamber and bar rack in the headworks structure.

Phosphorus Removal (Section C)

It is anticipated that the installation of a phosphorus removal system at the WWTP will be required by the draft General Permit for Phosphorus Discharges which is expected to be

issued by the CT DEP in the near future. ARI obtained two price quotations, one from Krueger (ACTIFLO System), and one from Blue Water Technologies (Blue PRO System). The equipment cost for each system is similar, at approximately $2,000,000 in 2009 dollars. The installation cost is estimated to be $1,200,000 in 2009 dollars. Operation and maintenance costs for the phosphorus removal system are estimated to be $310,300 per year in 2009 dollars.

Mercury Control from Incinerator Air Emissions (Section D)

The Borough of Naugatuck received draft Consent Order # 8282 in July 2009, which contained a draft compliance schedule for the control of mercury from the Incinerator air emissions. At present, the draft Consent Order has not been issued by DEP in final form.

ARI worked with its subcontractor, Air Quality Associates and Michael Holzman, Inc, to prepare a preliminary analysis of the available technologies for the control of mercury, as well as the equipment cost, installation cost and the operation and maintenance cost. The technology which was selected for the economic analysis was carbon injection with a fabric filter, since this technology appears most demonstrated. The equipment cost for a mercury removal system is estimated at $2,941,000 in 2009 dollars; this includes the installation cost. The operation and maintenance cost is estimated at $608,000 per year in 2009 dollars.

Repairs to Sanitary Sewer Collection System

At the request of the Borough, ARI included the cost of repairs to the Sanitary Sewer Collection System in the Preliminary Budget Analysis. The cost estimate was prepared by others. An annualized cost, before inflation and contingency, is estimated at $336,250 per year in 2010 dollars.

Preliminary Budget Analysis (Section E)

The preliminary WPCA Budget Analysis is included in Section E. It is summarized below.

The planning level cost analyses considered not only the costs described above, but the schedule associated with meeting anticipated DEP requirements. Prior to design and construction of facilities and equipment, detailed studies would be required to further define the improvements and in the case of mercury control and phosphorus, pilot testing would be required to evaluate the effectiveness of different controls. It is estimated that detailed studies, totaling $175,000 in 2011 dollars, would be completed during FY2011 for the grit chamber, bar rack, phosphorus removal and mercury control systems. Pilot testing would need to be conducted during FY2012 for the phosphorus removal and mercury control systems, at an estimated cost of $300,000 in 2012 dollars.

The total amount of new debt that would be required is approximately $15,440,000 in 2011 dollars. For the grit chamber, bar rack, and collection system improvements, the debt service would be begin in FY2011. This time frame was chosen to meet anticipated DEP

schedule requirements and because the construction and installation of the grit chamber, bar rack, and collection system improvements could be completed in FY2011. For the phosphorus removal and mercury control, the debt service would be begin in FY2013. This time frame was chosen because the phosphorus removal and mercury removal systems would require detailed pilot testing and more extensive design phases.

The preliminary budget analysis is summarized in Table 1.

Table 1
Proposed Improvements to Wastewater Treatment and Incineration Facilities
Projection of Impacts on Borough WPCA Budget
FY2011 – FY2015

Capital improvement Costs	**FY2009**	**FY2010**	**FY2011**	**FY2012**	**FY2013**	**FY2014**	**FY2015**
Mercury Control							
Detailed Study	$0	$0	$100,000	$0	$0	$0	$0
Pilot	$0	$0	$0	$150,000	$0	$0	$0
Capital and/or Capital Amortization	$0	$0	$0	$0	$400,988	$400,988	$400,988
O&M	$0	$0	$0	$0	$0	$805,537	$821,648
Phosphorus Removal							
Detailed Study	$0	$0	$50,000	$0	$0	$0	$0
Pilot	$0	$0	$0	$150,000	$0	$0	$0
Capital and/or Capital Amortization	$0	$0	$0	$0	$308,768	$308,768	$308,768
O&M	$0	$0	$0	$0	$0	$411,116	$419,338
Grit Chamber							
Detailed Study	$0	$0	$12,500	$0	$0	$0	$0
Capital and/or Capital Amortization	$0	$0	$19,002	$19,002	$19,002	$19,002	$19,002
O&M	$0	$0	$0	$0	$0	$0	$0
Bar Screen / Rack							
Detailed Study	$0	$0	$12,500	$0	$0	$0	$0
Capital and/or Capital Amortization	$0	$0	$15,071	$15,071	$15,071	$15,071	$15,071
O&M	$0	$0	$0	$0	$0	$0	$0
New Wet Well / Headworks Debt Service	$0	$0	$131,050	$131,050	$131,050	$131,050	$131,050
Collection System	$0	$0		$364,006	$364,006	$364,006	$364,006
Total Capital Improvement-Related Costs	**$0**	**$0**	**$704,129**	**$829,129**	**$1,238,885**	**$2,455,537**	**$2,479,871**

Table 1, continued
Impact on WPCA Budget

Impact Analysis	FY2009	FY2010	FY2011	FY2012	FY2013	FY2014	FY2015
Total Projected Costs Excluding Capital Improvements (12/24/08 Projection)	$1,472,846	$1,466,504	$1,446,477	$1,447,961	$1,452,041	$1,453,932	$1,462,942
Costs Due to Capital Improvements	$0	$0	$704,129	$829,129	$1,238,885	$2,455,537	$2,479,871
Total Projected Costs Including Capital Improvements	$1,472,846	$1,466,504	$2,150,605	$2,277,089	$2,690,925	$3,909,469	$3,942,813
Percent Increase Due to Capital Improvements	0%	0%	48%	57%	85%	169%	170%

This projection of impacts was completed by comparing the projected WPCA Budget (prepared by ARI on 12/24/08) without the capital improvements to the projected WPCA budget including the capital improvements.

The “Total Projected Costs Excluding Capital Improvements” amounts are from the ARI budget projection dated 12/24/08. The “Costs due to Capital Improvements” have been derived from the preliminary analyses of the proposed capital improvements.

Without the proposed improvements, the WPCA budget is projected to be in the range of $1,446,000 to 1,462,000 during the period of FY2011 to FY2015. The proposed capital improvements will have an impact on the WPCA budget starting in FY2011. The proposed increase to the WPCA budget in FY2011 is approximately $704,000. This amount increases to approximately $829,000 in FY2012, to $1,239,000 in FY2013, to $2,456,000 in FY2014, and to $2,480,000 in FY2015.

The projected increase in the WPCA Budget ranges from a 48% increase in FY2011 to a 170% increase in FY2015.

It is important to keep in mind that these are planning level analyses. Also, these projected budget increases have been calculated assuming that the Borough funds all of the improvements. The actual increases to the WPCA Budget may be less than projected, due to potential for payments by Middlebury and by other customers, including those served by Veolia’s merchant septage and merchant sludge operations.

Alternative Resources, Inc.

Corporate Headquarters

1732 Main Street
Concord, MA 01742
Tel (978) 371-2054
Fax (978) 371-7269

www.alt-res.com

MEMORANDUM

1201-1

TO: Jim Stewart (Borough)

cc: Jon Hoisak (Veolia)
John Batorski (Veolia)
Jim Binder (ARI)

FROM: Kathleen A. Luvisi

DATE: September 23, 2009

SUBJECT: **Grit Removal – Planning Level Cost Estimates**

It is anticipated that the CT DEP will issue a draft NPDES permit to Naugatuck in the near future. The draft permit is expected to include a requirement to install grit removal equipment at the WWTP. Presently, the Naugatuck WWTP does not include grit removal. As a result, the raw wastewater pumps, the centrifuges, and other equipment, are experiencing excessive wear. Installation of grit removal equipment would result in reduced wear on the equipment.

At the request of the Borough of Naugatuck, ARI has researched grit removal equipment, and for purposes of this preliminary analysis, has obtained one planning level cost estimate from an equipment vendor.

1.0 Grit Removal Process

Grit is defined as particles of solid materials that are heavier than the specific gravity of the organic solids in wastewater. Grit includes sand, gravel, cinders and other inorganic particles. Grit may also include organic particles such as coffee grounds or eggshells.

There are several methods used to remove grit from the wastewater. One method is a horizontal flow grit chamber. The inlet flow to the grit chamber is maintained at a constant upstream velocity of 1 ft/sec. This allows the grit to settle from the wastewater stream, while maintaining the organic solids in suspension. Another type of grit chamber is the aerated grit chamber, in which the chamber is aerated along one side of the chamber, parallel to the flow, resulting in a perpendicular spiral flow velocity pattern through the tank. The spiral flow directs the grit particles to the bottom of the chamber, while the lighter organic particles

remain in suspension. Another grit chamber design is the vortex grit chamber. The vortex grit chamber is a cylindrical tank in which the flow enters tangentially, creating a vortex flow pattern. The grit is directed to the bottom of the tank into a grit hopper, and the effluent flow exits at the top of the tank. The grit hopper is emptied by either a grit pump or air lift pump.

2.0 Information Obtained from Equipment Supplier

ARI contacted one vendor representative in order to obtain planning level cost data for grit chamber equipment. The average and peak flows used for design were 5.3 MGD and 17.5 MGD, respectively. These are the average and peak flows for the period for the period January 2008 through June 2009. The average and peak flow values used for actual design would need to be determined in a more detailed analysis.

2.1 PISTA GRIT System

The PISTA GRIT System is a Smith & Loveless product. The sizing of the PISTA GRIT equipment is based upon the peak flow of 17.5 MGD. The size recommended by the vendor's representative was the PISTA GRIT Model 20.0B unit. The PISTA GRIT system is a vortex grit removal system. The influent wastewater enters the grit chamber at a tangential angle, and is directed 360° around the inside perimeter of the grit chamber. The grit is directed to the bottom of the chamber. The effluent is directed up and out of the chamber along the top rim of the chamber.

The PISTA GRIT Model 20.0B has the following dimensions:

- Upper Chamber Diameter 16'-0"
- Upper Chamber Depth 7'-6"
- Lower Chamber Diameter (minimum) 5'-0"
- Lower Chamber Depth (minimum) 6'-10"
- Inlet & Outlet Channel Widths 4'-0"

Information describing the PISTA GRIT Model 20.0B, along with headloss and velocity calculation worksheets, is attached as Attachment A.

The quoted price for the PISTA GRIT Model 20.0B is $145,000. The price includes freight, startup, and training. The price does not include the design and construction of the concrete vault in which the PISTA GRIT unit will be placed. The price does not include field assembly, installation, piping, wiring, and conduit, field painting, grouting, or concrete work.

3.0 Design Considerations/Conclusions

It is not typical for a wastewater treatment plant to operate without a grit chamber. Grit chambers are usually installed in treatment plants at the time of construction, not as a modification to the existing plant. For the Naugatuck treatment plant, the grit chamber will need to be installed to fit into the influent channel at the appropriate depth, so that the influent to the grit chamber will flow by gravity at the appropriate flow velocity.

The grit chamber will need to be installed in a concrete vault at the appropriate depth, so that gravity flow is ensured. A review of record drawings will need to be done to make sure that there are no conflicts with underground utilities in the area of the influent channel.

The collected grit is lifted by either an air lift pump or a vortex pump to a hopper located at the ground level. The collected grit will need to be dewatered and disposed.

In a typical wastewater treatment design, the grit chamber is located downstream of the bar rack. The design and layout of the grit chamber should be done in conjunction with the new bar rack that is also being considered for the Naugatuck treatment plant. There is not enough space in the existing influent channel for the bar rack and the grit chamber.

The existing influent channel (two stories below ground level) is in the vicinity of the driveway at which the Merchant Sludge trucks off-load the sludge cake. Any construction or excavation in this area would disrupt or halt the delivery of cake sludge to the Naugatuck Incineration Facilities.

A more detailed engineering evaluation and cost estimate is required to confirm viability and firm up costs.

The installation of a grit chamber at the Naugatuck Treatment Plant would improve the operation and maintenance of the equipment by reducing the wear on the pipes, pumps, centrifuges, and other equipment.

ATTACHMENT A

Vendor Information from PISTA Grit

BUDGET PROPOSAL SUMMARY
PISTA® GRIT REMOVAL

1.0 GENERAL DESCRIPTION

One (1) Model 20.0B **PISTA®** Grit Chamber, suitable for installation in a concrete structure. The **PISTA®** shall be complete with the following: drive motor, spur gear final drive head, air bell, propeller, drive tube, Flow Control Baffles, top mounted turbo grit pump with vacuum priming panel, automatic NEMA 4X electrical controls, grit concentrator (cyclone) and a grit-dewatering conveyor.

2.0 PISTA® GRIT REMOVAL EQUIPMENT

The flow in the removal chamber shall travel between the inlet and outlet a minimum of 360 degrees, providing maximum travel of the liquid for effective grit removal. The **PISTA®** shall handle all flows equal to or less than the hydraulic peak flow of 20 MGD.

The standard dimensions of the Model 20.0B (360 degrees) **PISTA®** are as follows:
Upper Chamber Diameter..... 16'-0"
Upper Chamber Depth..... 7'-6"
Lower Chamber Diameter (minimum)..... 5'-0"
Lower Chamber Depth (minimum)..... 6'-10"
Inlet & Outlet Channel Widths..... 4'-0"

3.0 CORROSION PROTECTION

All fabricated steel components shall be commercial blasted and prime coated by the Manufacturer with one 3-mil DFT coat of Tnemec 66-1211 prior to shipment. All motors and gearboxes shall be furnished with the original manufacturer's coating. Final touch up and finish painting is the responsibility of the purchasing contractor.

4.0 ITEMS NOT INCLUDED

- Field assembly/erection or installation
- Interconnecting piping, wiring and conduit
- Field paint, painting, and final surface preparation
- Lubricants
- Anchorage, anchor bolts
- Field testing, if required
- Grouting
- All concrete work

5.0 DELIVERY, TERMS, BUDGET PRICING

Submittal drawings and other technical engineering details are expected to be complete in 4-6 weeks after receipt of a purchase order. Once Smith & Loveless receives approved drawings, manufacturing would take 12-14 weeks.

Payment Terms -To be determined

Budget Price List (FOB, Factory) – Price valid for 60 days
One Model 20.0B Units for concrete tank $145,000
Freight, startup and training .....Included

Complete PISTA Grit Removal System Installation Photo.

REVISED 360 W/BAFFLES

Peak flow 3.5 ft/s

Model	Q (MGD)	w1	b	h1	v1	q	h2	.6*h1	tank dia	floor to she	chamber h	chamber vc	Time	vin * cir	h std	headloss
20	3.64	4	2 11/12	0.704	2.00	3.64	0.395	0.4224	16	2.916667	3.62	727.98	129.28	182.9584	2.42	0.309
20	5.3	4	2 11/12	0.904	2.27	5.30	0.507	0.54265	16	2.916667	3.82	768.27	93.70	266.4009	2.42	0.397
20	7	4	2 11/12	1.089	2.49	7.00	0.611	0.65319	16	2.916667	4.01	805.32	74.37	351.8322	2.42	0.478
20	8	4	2 11/12	1.190	2.60	8.00	0.667	0.71406	16	2.916667	4.11	825.71	66.72	402.1217	2.42	0.523
20	9	4	2 11/12	1.287	2.70	9.00	0.722	0.7724	16	2.916667	4.20	845.26	60.71	452.3935	2.42	0.565
20	10	4	2 11/12	1.381	2.80	10.00	0.774	0.82864	16	2.916667	4.30	864.11	55.86	502.6793	2.42	0.607
20	11	4	2 11/12	1.472	2.89	11.00	0.825	0.88301	16	2.916667	4.39	882.33	51.85	552.9512	2.42	0.646
20	12	4	2 11/12	1.560	2.98	12.00	0.875	0.93574	16	2.916667	4.48	900.00	48.48	603.2201	2.42	0.685
20	15	4	2 11/12	1.810	3.21	15.00	1.015	1.08577	16	2.916667	4.73	950.27	40.95	753.9824	2.42	0.795
20	17.5	4	2 11/12	2.005	3.37	17.50	1.125	1.20328	16	2.916667	4.92	989.65	36.56	879.6455	2.42	0.881
20	20	4	2 11/12	2.192	3.53	20.00	1.229	1.3152	16	2.916667	5.11	1027.16	33.20	1005.227	2.42	0.963

MODEL 20.0B HEADLOSS CURVE

FLOW (MGD)	HEADLOSS (FT)
3.64	0.309
5.3	0.397
7	0.478
8	0.523
9	0.565
10	0.607
11	0.646
12	0.685
15	0.795
17.5	0.881
20	0.96

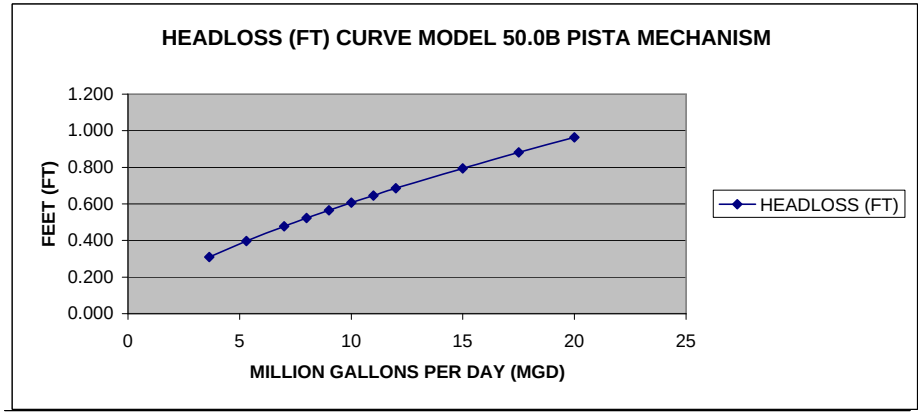

MODEL 20.0B velocity CURVE

FLOW (MGD)	Inlet velocity
3.64	2.00
5.3	2.27
7	2.49
8	2.60
9	2.70
10	2.80
11	2.89
12	2.98
15	3.21
17.5	3.37
20	3.53

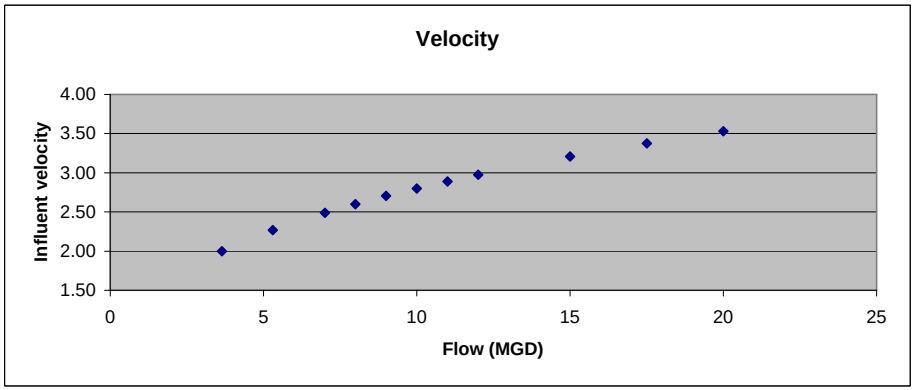

PISTA®

Grit Removal System

Complete Grit Handling, Washing, & Dewatering

Unparalleled Research & Development

Highest Grit Removal Efficiencies

by Smith & Loveless Inc.

PISTA®

GRIT REMOVAL SYSTEM

C. Lancaster

UNPARALLELED INNOVATION FOR 30+ YEARS.

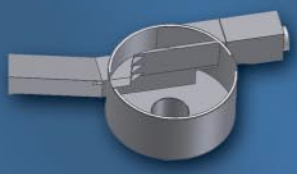

- 1973 - PISTA® Grit Removal System (270°)
- 1974 - PISTA® Grit Screw Conveyor
- 1978 - Air Lift Vents
- 1981 - 50 MGD PISTA® Grit Chamber
- 1982 - 175 GPM PISTA® Grit Concentrator
- 1982 - 4" PISTA® Turbo Grit Pump
- 1984 - 70 MGD PISTA® Grit Chamber
- 1988 - 360° PISTA® In-Line Design
- 1988 - 250 GPM PISTA® Grit Concentrator
- 1989 - Parallel (Lamella) Plate Screw Conveyor
- 1992 - PISTA® Grit Fluidizer
- 1998 - 6" PISTA® Turbo Grit Pump
- 1998 - 500 GPM PISTA® Grit Concentrator (Ni-Hard)
- 1999 - 100 MGD PISTA® Grit Chamber
- 2004 - PISTA® Flow Control Baffle
- 2004 - PISTA® Turbo Grit Pump with SonicStart™

PISTA® Grit Removal System

Smith & Loveless' commitment to market leadership in grit removal kindles on-going research and development, which leads to continued system innovations. Since the introduction of the original vortex **PISTA**® Grit Chamber in the early 1970s, S&L has developed numerous patented and exclusive components to further enhance the capability for complete grit removal, handling, and dewatering. This innovation and experience makes the unparalleled **PISTA**® the industry's most specified grit removal system today.

Exclusive & Patented Features

- *Flat Bottom **PISTA**® Grit Chamber*
- ***PISTA**® Grit Flow Control Baffle*
- ***PISTA**® 360-degree In-Line Design*
- *Low Energy-Use **PISTA**® Propeller*
- *S&L **PISTA**® Coanda Ramp Design*
- ***PISTA**® Grit Fluidizer Vane*
- ***PISTA**® Turbo Grit Pumps with **SonicStart**™*
- ***PISTA**® Grit Handling System*

PISTA® Grit Removal System *Unparalleled Vortex Grit Removal*

Removing grit reduces accumulation in downstream basins, channels and piping, thus preventing excess wear and abrasion on mechanical equipment and reduction of basin volumes and detention times.

The **PISTA**® Grit Removal System maintains the highest proven grit removal effciencies on the market over a wide range of daily flows. In fact, Smith & Loveless—backed by the experience *and* evidence of more than 2,000 system installations—publishes its removal efficiencies for a range of grit sizes, including fine grit. The **PISTA**® efficiencies are based on actual WWTP performance—not hypothetical testing or theorizing.

High removal efficiencies originate from the **PISTA**®'s unparalleled hydraulic design, including its flat grit chamber floor, engineered baffle arrangements and low-energy axial-flow propeller. The combination creates a true vortex which effectively separates grit from organics and the waste stream. Forced vortex action distinguishes the **PISTA**® because it does not rely *only* on less efficient particle settling or gravity.

Grit Characteristics & Removal

Grit consists of a variety of particles including sand, gravel and other heavy, discrete inorganic materials. A large majority of grit found in typical domestic sewage–in upwards of 90% and more–are coarser particles 50 mesh size grit and larger (300 µm). The remainder composition of smaller grit particles mostly ranges between 50 and 100 mesh (150 µm). Grit particles can reach 200 mesh (100 µm) in size—like silt—but turbulence in the flow prevents them from settling anywhere in the treatment scheme (not posing problems like typical grit). S&L's published removal efficiencies demonstrate percentage removal at various particulate sizes and total removal. Our field tests consistently prove that the **PISTA**® meets or exceeds 95 percent removal efficiency for all grit in a waste stream.

PISTA® Grit Chamber Features and Benefits

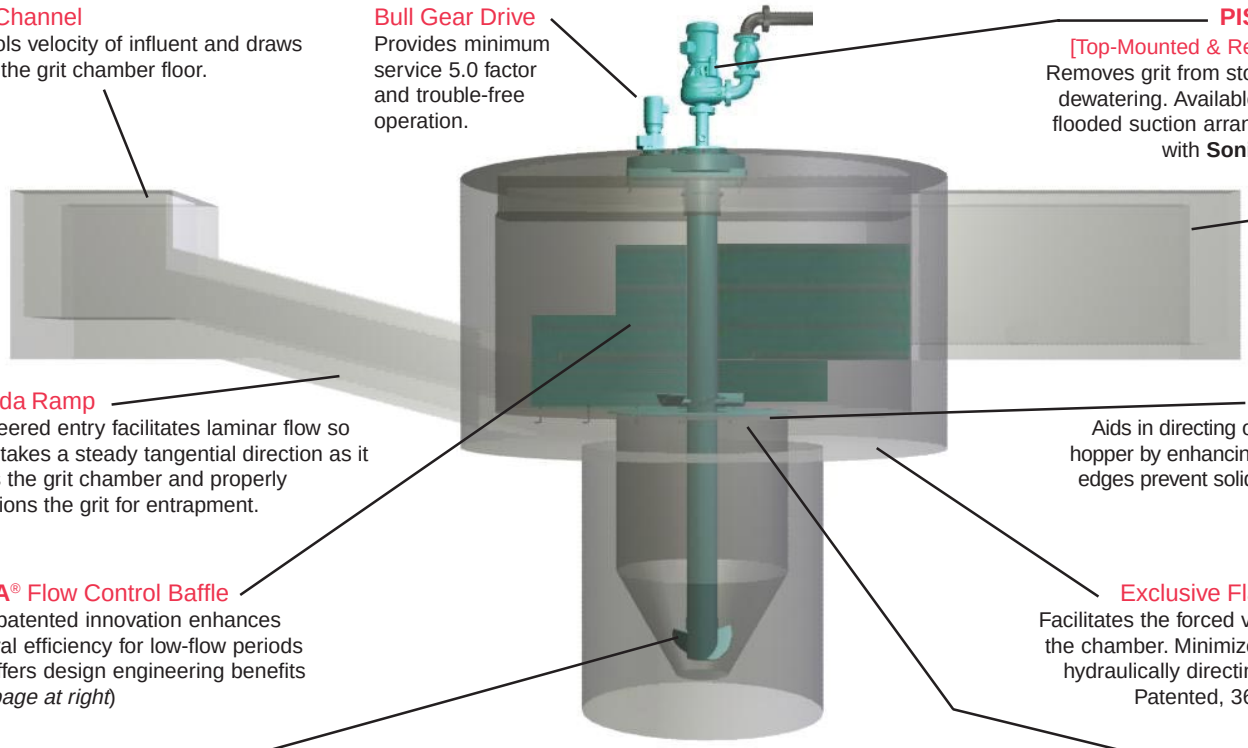

Inlet Channel
Controls velocity of influent and draws grit to the grit chamber floor.

Bull Gear Drive
Provides minimum service 5.0 factor and trouble-free operation.

PISTA® Turbo Grit Pump
[Top-Mounted & Remote-Mounted Options]
Removes grit from storage hopper to washing dewatering. Available in vacuum-primed and flooded suction arrangements. Now available with **SonicStart**™ prime sensing.

Outlet Channel
S&L can assist with design information for optimal performance.

Coanda Ramp
Engineered entry facilitates laminar flow so that it takes a steady tangential direction as it enters the grit chamber and properly conditions the grit for entrapment.

Axial-Flow Propeller
Aids in directing organic-free grit into lower hopper by enhancing flow patterns. Rounded edges prevent solids build-up, thus ensuring high efficiency.

PISTA® Flow Control Baffle
New, patented innovation enhances removal efficiency for low-flow periods and offers design engineering benefits (*see page at right*)

Exclusive Flat-Bottom Basin Floor
Facilitates the forced vortex flow pattern inside the chamber. Minimizes organic capture while hydraulically directing grit into lower hopper. Patented, 360-degree in-line design.

PISTA® Grit Fluidizer
Patented blade exclusive to S&L design. Loosens collected grit, preventing compacting.

Storage Hopper
Stores removed grit prior to dewatering.

Hopper Cover Plate
Stationary and recessed, it removes for quick access to storage hopper.

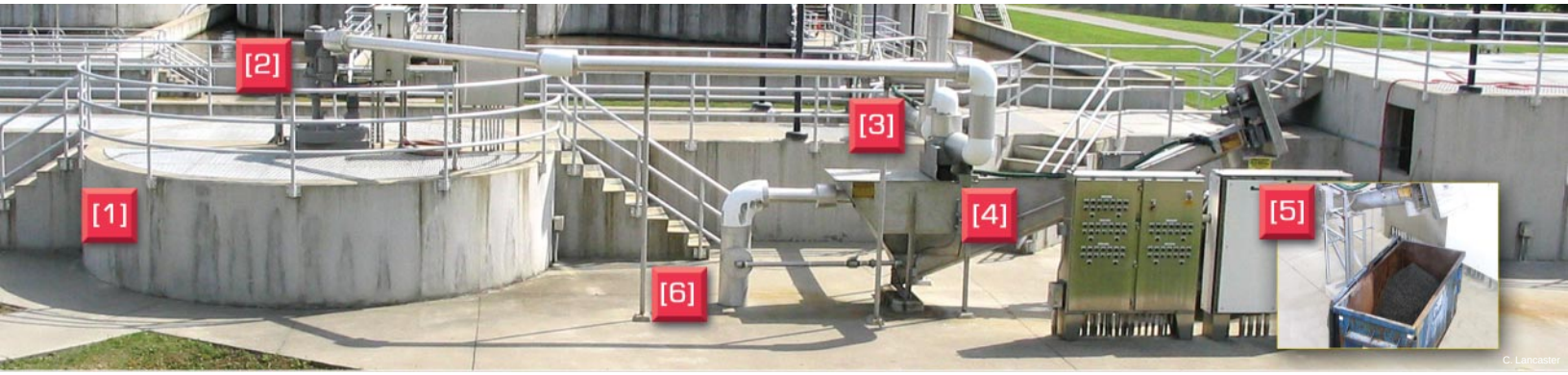

PISTA® Complete Grit Removal, Handling & Dewatering System Flow Scheme

[1] ***PISTA® Grit Chamber —*** Influent enters flat-floor grit chamber hydraulically guided by coanda ramp, internal baffles and central, low-speed propeller. Forced vortex drives grit particles to center chamber floor and into lower grit hopper while organics and flow continue to plant.

[2] ***PISTA® Turbo Grit Pump —*** Top-mounted or remote mounted unit pumps collected grit slurry (kept fluid by the **PISTA®** Grit Fluidizer) to the **PISTA®**'s second-stage grit washing and dewatering system while also providing proper head.

[3] ***PISTA® Grit Concentrator —*** Specifically engineered for the **PISTA®** system, this abrasion-resistant Ni-Hard unit washes grit further. It positions on the grit discharge line.

[4] ***PISTA® Grit Screw Conveyor —*** Grit from the concentrator deposits into the parallel (lamella) plate section of the S&L dewatering screw conveyor, which aids in retaining finer grit and reducing the stream's turbulence and overflow rate.

[5] ***Dewatered Grit Discharges*** from the top of the inclined screw conveyor into a container for disposal.

[6] ***The Flow and any Residual Organics are Returned*** to the inlet channel prior to the grit chamber, typically 93% of flow and 95% of organics.

PISTA® Grit Removal System — Design & Application

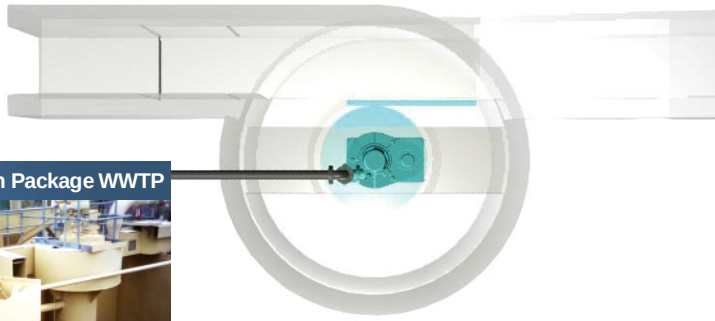

500+ MGD Municipal Headworks

Glass Plant - Stainless Steel

Integral PISTA® in Package WWTP

The patented 360-degree in-line design (Model A Series) allows for easy installation to existing headworks.

PISTA® offers flexible application for true grit removal, whether from domestic sewage in a municipal WWTP headworks, distribution network pump stations or industrial process streams in a commercial production facility. The grit chamber can be installed above-grade or below ground with either concrete, carbon steel, or stainless steel tankage.

Individual units can handle waste streams less than 0.5 MGD all the way to 100 MGD. In large treatment works, multiple units arrange to efficiently remove grit from hundreds of millions of gallons of flow a day.

PISTA® Model Number	Max. Flow	Metric
0.5 / 0.5A	0.5 MGD	1,892 CMD
1.0 / 1.0A	1.0 MGD	3,785 CMD
2.5 / 2.5A	2.5 MGD	9,465 CMD
4.0 / 4.0A	4.0 MGD	15,140 CMD
7.0 / 7.0A	7.0 MGD	26,495 CMD
12.0 / 12.0A	12.0 MGD	45,420 CMD
20.0 / 20.0A	20.0 MGD	75,700 CMD
30.0 / 30.0A	30.0 MGD	113,550 CMD
50.0 / 50.0A	50.0 MGD	189,250 CMD
70.0 / 70.0A	70.0 MGD	265,000 CMD
100 / 100.0A	100.0 MGD	378,500 CMD

PISTA® Grit Removal System — New Flow Control Baffle Provides Engineering Benefits

The patented **PISTA®** Grit Flow Control Baffle provides many engineering benefits and cost-saving considerations. By increasing chamber velocity during low flow periods, the baffle extends the grit extraction path within the vortexing grit chamber. This is key because a longer grit path within in the flow pattern increases the likelihood of grit being captured on the chamber's flat-floor.

Beyond this, the **PISTA®** Grit Flow Control Baffle also permits design flexibility so that water elevations can be controlled. Controlling the water level is important because it upholds the proper velocities approaching the grit chamber. Previously, the most common way to accomplish this was to back up the flow with a downstream submerged weir. The **PISTA®** Flow Control Baffle with its preset inlet and outlet openings supplants the need for the submerged weir. By integrating the water elevation settings with the baffle, the overall outlet footprint requirements decrease as much as half the typical distance. This also affords the design engineer the flexibility to allow an outlet channel to make sharp turns immediately after leaving the circular portion of the grit chamber. The resulting smaller footprint provides significant construction cost savings.

Flow Control Baffle Benefits

- *Increases grit chamber velocity during low-flow periods and removal efficiency by lengthening grit extraction path.*
- *Controls flow velocity and eliminates need for downstream level control devices.*
- *Decreases overall grit system footprint requirements.*

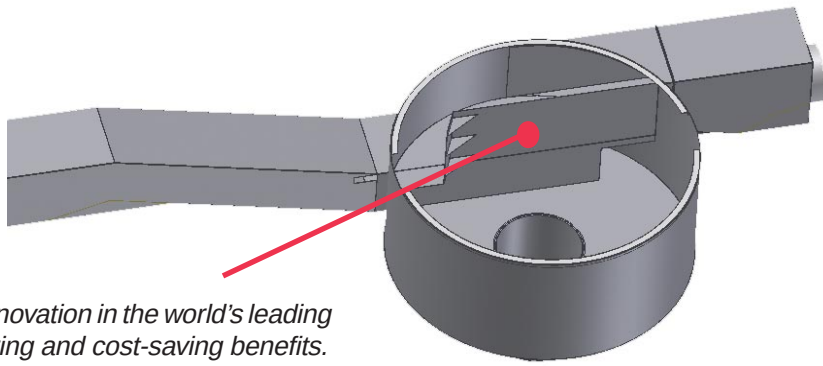

*The **PISTA®** Grit Chamber Flow Control Baffle is the latest design innovation in the world's leading grit removal system. The baffle development offers many engineering and cost-saving benefits.*

Unparalleled Grit Removal.

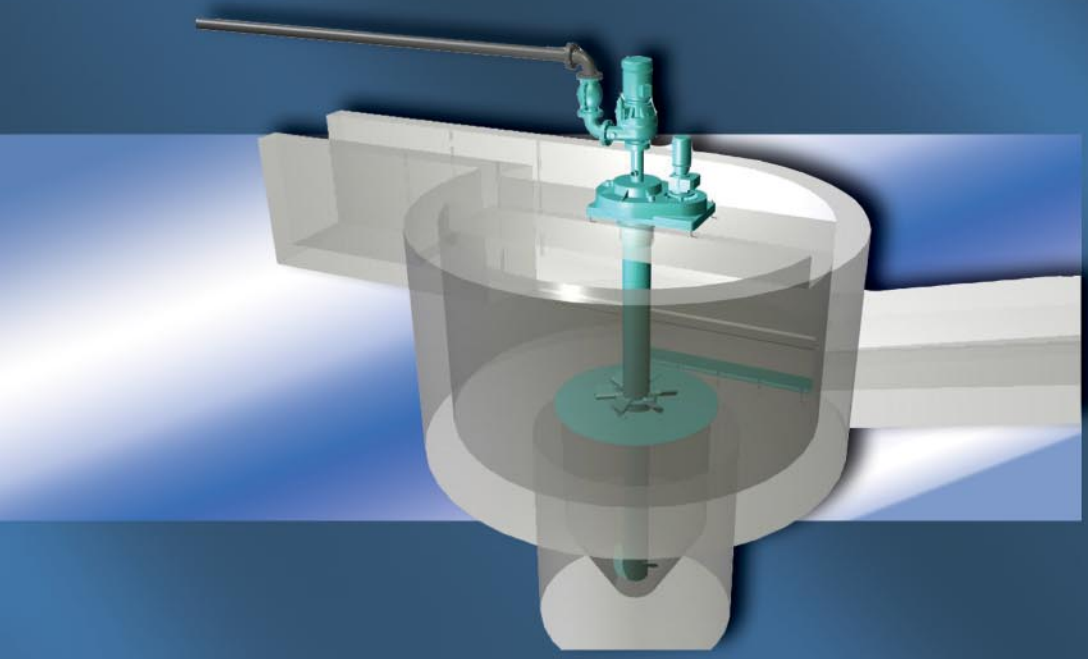

Smith & Loveless Inc. knows grit removal. Our experience flows from more than three decades of thorough R&D and 2000+ PISTA® installations throughout North America and the world. Along the way, we've continued to enhance the complete system with innovations that deliver unparalleled results. With the PISTA® Grit Removal System you receive the finest in system performance backed by the value-added experience and support of Smith & Loveless.

PISTA®

Grit Removal System

by Smith & Loveless Inc.

Bulletin #950 © Copyright, Smith & Loveless Inc. , 2005 • P: 913.888.5201 • F: 913.888.2173 • web: smithandloveless.com

Alternative Resources, Inc.

Corporate Headquarters

1732 Main Street
Concord, MA 01742
Tel (978) 371-2054
Fax (978) 371-7269

www.alt-res.com

MEMORANDUM

1201-1

TO: Jim Stewart (Borough)

cc: Jon Hoisak (Veolia)
John Batorski (Veolia)
Jim Binder (ARI)

FROM: Kathleen A. Luvisi

DATE: September 23, 2009

SUBJECT: **Bar Rack – Planning Level Cost Estimates**

It is anticipated that the CT DEP will issue a draft NPDES permit to Naugatuck in the near future. The draft permit is expected to include a requirement to install a bar rack in the influent channel at the WWTP. Presently, the Naugatuck WWTP is not equipped with a bar rack. As a result, the raw wastewater pumps are frequently clogged by debris such as rags or pieces of wood. The Veolia treatment plant operator estimates that more than $100,000 has been spent over the past year on repairs to the raw wastewater pumps. The damage to the pumps includes cracked pump shafts, cracked pump casing, cracked or broken impellers, and damage to the pump bearings and seals. Installation of a bar rack would result in reduced operation and maintenance cost on the raw wastewater pumps.

At the request of the Borough of Naugatuck, ARI has researched bar rack equipment, and at this time for purposes of this preliminary analysis has obtained one planning level cost estimate from an equipment supplier.

1.0 Bar Rack Description

A bar rack, a set of vertically spaced bars, is placed in the influent channel. The bars are positioned at an angle from 0° to 30° from the vertical. As the influent wastewater flow passes through the bars, large debris collects on the bars. The debris may include rocks, branches, pieces of lumber, paper, plastic, and rags. The bar rack is periodically raked to remove the debris. The debris is collected, dewatered by gravity or by pressure against a perforated cylinder, and disposed.

Bar racks may be either manually cleaned, or mechanically cleaned. In the manually cleaned bar rack, the debris is raked from the bars by hand. In the mechanically cleaned bar rack, a mechanized rake periodically rakes the debris from the bars. The cleaning cycle is set using a programmable controller either on a time interval, or by a head loss differential measurement, which starts a cleaning cycle when the head loss across the bar rack reaches a certain set point.

The design of the influent channel is important to proper operation of the bar rack. The design of the influent channel should ensure that the minimum flow velocity is maintained at 1.25 ft/sec. To prevent pass through of debris at high flow rates, the velocity through the bars should not exceed 3 ft/sec. Also, it is recommended that the influent channel approach to the bar rack be a straight approach, perpendicular to the bar rack, to distribute the solids uniformly on to the bar rack.

2.0 Information Obtained from Equipment Supplier

ARI contacted one vendor representative in order to obtain planning level cost data for bar rack equipment. The average and peak flows used for design purposes are 5.3 MGD and 17.5 MGD, respectively. These are the average and peak flows for the period for the period January 2008 through June 2009. The average and peak flow values used for actual design would need to be determined in a more detailed analysis.

2.1 Enviro-Care Flo-Screen

The Enviro-Care Flo-Screen is a bar rack with ½-inch bar spacing. The Enviro-Care Flo-Screen has the following design parameters:

- Channel Width 4’-0”
- Channel Depth 4’-0”
- Debris Discharge Height 8’-0” from channel bottom
- Bar Spacing ½ inch
- Angle from Horizontal 85 degrees”
- Material of Construction 304 stainless steel

Information describing the Enviro-Care Flo-Screen is attached as Attachment A.

The quoted price for the Enviro-Care Flo-Screen is $115,000. The price includes freight. The price does not include the design and construction of the concrete influent channel in which the Enviro-Care Flo-Screen unit will be placed. The price does not include installation, or wiring and installation of the electrical and control systems.

3.0 Design Considerations/Conclusions

It is not typical for a wastewater treatment plant to operate without a bar rack. There is visual evidence in the existing influent chamber at the treatment plant that a bar rack was installed at some time in the past. There is evidence of supporting rails, and an opening in

the concrete which has been patched over. Some consideration was given to installing a new bar rack in the existing influent channel. If this were done, then the bar rack would be downstream of the grit chamber. This is not recommended.

In a typical wastewater treatment design, the grit chamber is located downstream of the bar rack. The design and layout of the new bar rack should be done in conjunction with the new grit chamber that is also being considered for the Naugatuck treatment plant. There is not enough space in the existing influent channel for the bar rack and the grit chamber.

The new bar rack will need to be installed in a new influent channel vault at the appropriate depth, so that gravity flow to the bar rack is ensured. A review of record drawings will need to be done to make sure that there are no conflicts with underground utilities in the area of the new influent channel.

The collected screenings would be lifted by a bucket on rails to a hopper located at the ground level. The collected screenings will need to be dewatered and disposed.

The existing influent channel (two stories below ground level) is in the vicinity of the driveway at which the Merchant Sludge trucks off-load the sludge cake. Any construction or excavation in this area would disrupt or halt the delivery of cake sludge to the Naugatuck Incineration Facilities.

A more detailed engineering analysis and cost estimate is required to confirm viability and firm up costs.

ATTACHMENT A

Vendor Information from Envirocare

8.13.2009

Tom Valorose
J&R Engineered Products

Project # EC209069 Naugatuck, CT.

We are pleased to provide a budgetary quote for the Enviro-Care Flo-Screen for the above referenced project:

Flo-Screen:	Bar channel screen
Number of Units:	1
Drive Type:	Ball bearing screw
Flow Rate (MGD):	5.3 avg./17.5 max.
Channel Width:	4′
Channel Depth:	4′
Debris Discharge Height:	8′ from channel bottom
Bar Spacing:	1/2 inch
Angle from Horizontal:	85 degrees
Materials:	304 Stainless Steel
Electrical Controls:	Control panel mounted on stand for Flo-ScreenNEMA 4X, 480 V, 3 ph
Included:	Auto lube
Price:	**$115,000.00 USD Total**
Start Up:	2 days, 1 trip (included)
Terms of Payment:	90% due upon shipment, 10% retainage due net 30
Freight:	Included
Delivery:	10-12 weeks from signed approvals
Warranty:	1 year limited

Submitted by:

Alan R. Spratt

5701 Industrial Ave. / Rockford, IL 61111
Phone: (815)636-8306 / Fax: (815)636-8302
E-mail: ecsales@enviro-care.com / www.enviro-care.com

Flo-Screen with Ball Bearing Screw Drive
Mechanically Cleaned Bar Screen

Part 1: General

1.1 Summary

A. This section specifies equipment for the collection and removal of debris from incoming wastewater by means of a bar screen rack to retain debris, and a traveling, reciprocating rake that removes and elevates the debris to a discharge mechanism.
B. Each Flo-Screen includes a bar rack, traveling rake, discharge/wiper mechanism, drive system and electrical control panel.

1.2 References

The following industry standards are used in the manufacture of the mechanically cleaned bar screen:

A. AISI (American Iron and Steel Institute)
B. NEMA (National Electrical Manufacturer's Association)
C. ASTM (American Society for Testing and Materials)
D. WSC (American Welding Society Code)

1.3 System Description

The Flo-Screen removes solids from process streams. The saw tooth rake contacts both upstream sides of the screen bars for increased solids removal and reduced buildup. The rake is hydraulically actuated by a ball bearing screw drive. Between raking cycles, the rake parks flat at the bottom of the channel to catch solids and reduce jams caused by sunken debris. System automatic operation is controlled by a Programmable Logic Controller (PLC) enclosed in an electrical control panel with ergonomically designed controls.

1.4 Submittals

Shop drawings and product data shall be provided for engineering approval 30 days from receipt of order. Operating & Maintenance Manuals shall be provided that include equipment description, operation instructions, drawings, maintenance schedules, and recommended lubricants.

1.5 Warranty

All Enviro-Care manufactured equipment is covered against manufacturing defects in materials and workmanship during normal use and service, as long as periodic

maintenance procedures are followed and performed, for a period of one (1) year from date of purchase. Items specifically not covered by the one year warranty are consumable wear components such as wiper materials, rake teeth and rake plates. Supplied accessory components not manufactured by Enviro-Care, such as ball bearing screw drive, motors, pumps, fittings, and controls are covered by their manufacturer's standard warranty.

1.6 System Installation and Startup

The initial installation of Enviro-Care equipment shall be done by the Purchaser. Startup procedures shall be performed by Enviro-Care personnel and/or an authorized Enviro-Care representative. Detailed installation procedures shall be supplied in the Enviro-Care Operating & Maintenance Manual.

1.7 Owner's Instructions

Two (2) copies of complete Operating & Maintenance Manual instructions shall be supplied with the equipment, and include the following sections:

A. Mechanical, Electrical & Hydraulic Drawings
B. Job Information, Product Brochures, Standard Conditions of Sale
C. Mechanical Specifications
D. Standard Operating Procedures
    1. Sequence of Operation
    2. Startup, Manual, and Automatic Operation Procedures
    3. High Water Condition Procedure
    4. Shutdown Procedure
    5. Alarms & Troubleshooting
E. Maintenance Procedures
F. Mechanical Equipment Information
G. Electrical Equipment Information
H. Hydraulic Equipment Information
I. Warranty Information

Part 2: Products

2.1 Manufacturers

Mechanically cleaned bar screen equipment shall be as manufactured by Enviro-Care, Inc., of Rockford, Illinois, U.S.A. Equipment provided shall be an Enviro-Care Flo-Screen with ball bearing screw drive.

2.2 Materials

The materials used in the construction of Enviro-Care products include the following.

A. Bar rack - AISI, Type 304 stainless steel.
B. Cleaning rake, rake arms, and wiper - AISI, Type 304 stainless steel.
C. Side frames - AISI, Type 304 stainless steel.
D. Ball Bearing Screw - Alloy steel, Rockwell C56 hardness.

2.3 Equipment

A. The reciprocating rake is designed so that it automatically cleans the two upstream sides of the screen bars. The rake remains in the bottom of the channel in contact with the screen bars when it is not cycling. The vertical movement of the rake will be approximately 12 feet per minute, driven by a ball bearing screw driven by a reversible hydraulic motor. The up-stroke and down-stroke limits of rake travel are set by proximity switches, and controlled by the PLC.
B. The teeth on the rake are in close proximity to the screen bars, and penetrate between the bars, preventing blockage when the rake is scraping debris from the bars during the up-stroke. Debris is wiped off the rake by a stainless steel wiper with a synthetic material edge.
C. When the wiping action is completed and the rotation of the ball bearing screw drive has been reversed by the PLC and proximity switch, the rake will start the down-stroke. The linear hydraulic cylinders energize and pull the rake away from the screen. When the rake is in the Home position, the hydraulic cylinders reverse, and push the rake back into position.
D. If the rake is obstructed during an up-cycle, the system will make two attempts to complete the cycle. If the cycle cannot be completed, a general alarm will be set. If the rake is obstructed during a down-cycle, the system will make four attempts to complete the cycle. If the cycle is not completed, a general alarm will be set. Overload protection for both hydraulic and electric motors is provided in case of obstruction during the up- or down-stroke.
E. The hydraulic drive motor for the ball bearing screw drive receives power from a hydraulic power unit.
F. The electrical control panel is mounted with the hydraulic power unit on a stand, unless otherwise specified.

2.4 Components

A. Flo-Screen with Ball Bearing Screw Drive

1. The entire screen frame, bar assembly, mounting rails, and brackets will be built from Type 304 stainless steel (except for the ball bearing screw drive assembly). Fasteners will be Type 304 stainless steel. Welding of all components integral to the product will be done by MIG welding using stainless steel wire.
2. The frame will be constructed from channel and angle stock of adequate thickness so as to provide stability, reliability, and safety of operation.
3. The screen equipment will have integral anchor brackets attached to the side frame that securely mount the screen to the top of the channel. No mounting points will be within the channel side walls or floor, unless otherwise specified or where the configuration of the equipment requires other mounting options.
4. The rake guide rollers are contained in channel stock frame structure on each side of the upper bar screen assembly to provide positive rake positioning. The wiper assembly and the ball bearing screw drive will be mounted on the frame above the liquid flow channel. The bottom end of the screw drive will be close-coupled to the hydraulic motor drive shaft. The rake travel is controlled by the traveling ball bearing nut riding on the ball bearing screw drive.
5. With the exception of the rake and rake arms, all moving parts will be above the maximum water surface elevation.

B. Hydraulic Power Unit

1. The Hydraulic Power Unit consists of the following components.
   a. Electric Motor - 5 HP, 208/230/460 V, 3-Phase, 1.15 SF, TEFC
      208 V 3 Phase @ 1 5.1 Full Load Amps
      230 V 3 Phase @ 13.2 Full Load Amps
      460 V 3 Phase © 5.5 Full Load Amps
   b. 10 gallon reservoir fitted with:
      1. filler breather
      2. oil level gauge
      3. oil temperature gauge w/visual thermometer
      4. low level drain port
   c. Pressure balanced pump
   d. Suction Strainer, 100 mesh
   e. Pressure relief valve, adjustable
   f. Pressure gauge for system pressure

g. Control valves
h. Return line filter w/gauge for flow
i. Float switch, for low oil level detection
j. Pressure switch, for rake stall/over-load detection

2. The hydraulic unit is shipped with ATF Dexron III Fluid. Temperature constraints may dictate use of substitute oil. The recommend operating temperature is above ambient 38 degrees Fahrenheit (unless otherwise specified).
3. The electric motor is mounted on the reservoir's top cover and close-coupled to the hydraulic pump mounted inside the reservoir. The power unit supplies the oil at a maximum pressure of 800 psi for driving the rake hydraulic motor and cylinders.
4. Abrasive resistant hoses shall be provided with suitable connectors to connect the power unit to the screw drive motors and linear rake cylinders. The maximum recommended length is 20 feet. When length is over 20', ½" ID Stainless Steel tubing and fittings are recommended (not provided by Enviro-Care Company, Inc.)

C. Controls

1. All screen-related electrical control devices are connected to the control panel through intrinsically safe circuit barriers.
2. An electric control panel shall be furnished to control and monitor Flo-Screen operations and protect the screen from damage.
3. The control panel shall meet NEMA and NEC standards.
4. The enclosure assembly shall be rated NEMA4 (unless otherwise stated), and will be completely pre-wired and factory tested before shipment.
5. The Flo-Screen system will be designed to receive electrical power from a single branch circuit input connected to terminal lugs located within the control panel. The branch circuit must be provided by the Purchaser, and shall be rated at 5.5 amps at 460 volts three-phase (or 13.2 amps at 230 volts three-phase).
6. The control panel shall provide alarms for the hydraulic power unit. Motor overload, high hydraulic pressure, and low hydraulic fluid level conditions will shut down the control valves and drive motors, and activate the alarm condition and horn sequence. The alarm horn will sound for 3 seconds then stop for one minute to preserve the life of the alarm horn in an unattended facility.
7. Upon loss and subsequent restoration of power, the alarm horn will sound in 1 second pulses for 3 minutes to alert personnel of a restart condition.

The individual cycle that was in motion will continue and complete the entire cycle.

NOTE: this will only happen should the power fail in the middle of a cycle.

8. All functional parameters are controlled through a keypad and digital display operator interface located on the front of the control panel. The operator interface consists of a large 2 x 20 LCD with a 16-button keypad. The display is designed for operation in even very bright or very dim environments.
9. The operator interface will be programmed with standard operational function and information displays and, as an option, can be programmed to customize the interface to meet special operational needs. The PLC logic also contains counters and history features that records system events for troubleshooting.
10. The PLC is of modular design allowing simple modular component replacement should there be a component failure.
11. The rake cycling frequency can be switched between manual and automatic operation. Automatic rake cycling frequency is set in the PLC.
12. If the optional High Influent Level System or Differential Water Level System is installed, the unit will run continuously until the condition is corrected. Refer to Optional Equipment (Controls) for further details.
13. A counter located inside the control cabinet counts the cycles of the system for preventive maintenance and historical data.

2.5 Accessories and Options (Not Included unless specified)

A Optional Equipment (Controls)

1. Remote Stop Buttons.
   These buttons are connected remotely to the control panel to interrupt all movement of equipment.
2. High Influent Level System
   This system automatically initiates a continuous rake cycle, overriding the interval timer, when a preset high influent channel level is exceeded. When influent level returns to normal, the interval timer resumes automatic operation. It includes a “High Level” indicator lamp mounted on the control pane, and one influent level float that mounts in the influent side of the channel.
   NOTE: This can also be accomplished with a customer supplied level monitor device.
3. Differential Water Level System

This system automatically initiates a rake cycle, overriding the interval timer, when a preset head loss across the bar screen is exceeded. It includes a "Differential Level Control" indicator lamp mounted on the control panel, and two level floats to be mounted on each side of the Flo-Screen in the channel.
NOTE: This can also be accomplished with a customer supplied level monitor device.

4. Remote Control Station
   The Remote Control Station is protected to Class 1, Division 1, Group D environments with one "Local-Remote" selector switch (lockable in "Local" position) and one "Rake: Up-Off-Down" selector switch.
5. Automatic Central Lubrication.
   This will facilitate the lubrication of all critical points that require lubrication. Intervals are programmed in the PLC.

2.6 Source Quality Control

The Flo-Screen shall be factory assembled and tested before shipping.

Part 3: Execution

3.1 Preparation

The mounting points of the channel should be level and parallel and of proper size.

3.2 Lifting and Moving Equipment

Lifting points shall be identified on all Enviro-Care equipment. A crane of sufficient capacity must be on-site for unloading the equipment from the truck and placing in the channel for installation.

3.3 Installation

The basic installation is the responsibility of the Purchaser. Complete installation procedures are included with the unit when it is shipped.

3.4 Start Up

The initial start up of Enviro-Care equipment will be done by Enviro-Care personnel and/or an authorized Enviro-Care representative.

3.5 Field Quality Control

An Enviro-Care authorized representative will verify the proper operation and provide training to the equipment operators.

3.6 Adjusting

Information on minor periodic adjustments of proximity switches is contained in the Operating & Maintenance Manual.

3.7 Cleaning

Information on periodic cleaning is contained in the Operating & Maintenance Manual.

Simply Superior.

FLO-SCREEN™

Wastewater Screen

Enviro-Care

Keeping It Simple Since 1972

Flo-Screen Design Data Sheet

Customer Information:

Name: _____ Phone: _____

Address: _____ Fax: _____

_____ E-Mail: _____

Quote Type: ☐ Firm ☐ Budget

Flo-Screen:

A (Channel Width)	
B (Channel Height)	
C (Water Depth)	
D (Discharge Height)	

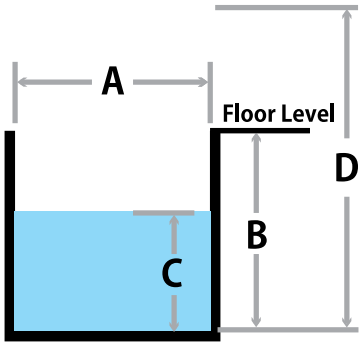

Bar Spacing:

☐ 1/4″ ☐ 3/8″ ☐ 1/2″ ☐ 5/8″

☐ 3/4″ ☐ 1″ ☐ 1 ½″ ☐ 2″

Flo-Screen XD:

A (Channel Width)	
B (Channel Height)	
B1 (Floor Height)	
C (Water Depth)	
D (Discharge Height)	

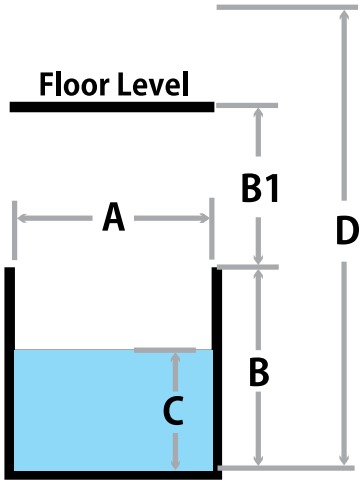

Average Flow Rate	
Maximum Flow Rate	

Supply Voltage: ☐ 460v/3ph ☐ 230v/3ph ☐ 208v/3ph ☐ Other: _____

Material: ☐ 304 Stainless Steel ☐ 316 Stainless Steel ☐ Other: _____

Location: ☐ Indoors ☐ Outdoors Minimum expected temperature: _____

Options: ☐ Remote Panel ☐ Differential Level Control

☐ High Water Level Control

Flo-Screen™

FLO-SCREEN™

Wastewater Screen

Well suited to applications requiring a discharge height of 12 feet or less from the bottom of the channel. The Flo-Screen™ increases screening efficiency while reducing operation and maintenance costs.

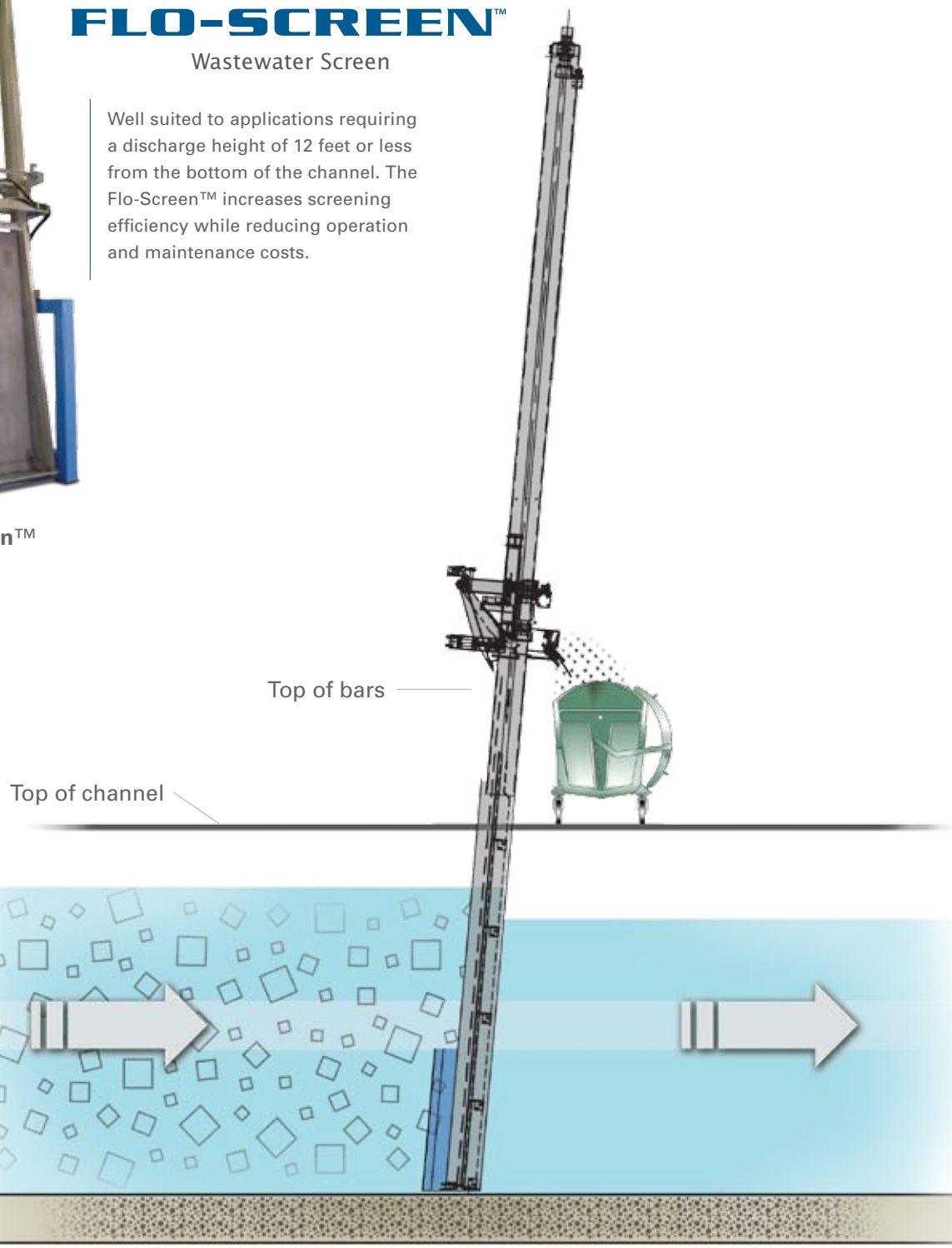

Flo-Screen™ specific features & benefits:

• Single screen widths up to 72″ • Accommodates flow rates from <1 MGD - >100 MGD • Discharge heights up to 12′ from the bottom of the channel • Standard 304ss construction, others upon request • Bar spacing available from 1/4″ - 2″

Better Solids Capture. Lower Maintenance. Better Screening.

With their simple yet innovative designs, the Flo-Screen™ and Flo-Screen XD™ bar screens combine high solids capture and screening efficiency with low maintenance.

Unlike conventional rack and pinion design bar screens which have numerous moving parts, the Flo-Screen features a unique hydraulically driven ball bearing screw which requires no maintenance. The Flo-Screen further minimizes maintenance costs with its robust saw-tooth rake design which eliminates tooth breakage. Installation of the Flo-Screen is also a simple procedure, eliminating costly channel modifications.

With its patented angled bar design, the Flo-Screen retains solids more efficiently than conventional bar screens by increasing the screen's surface area. Innovative saw-tooth rake removes more solids and grease buildup by increasing the rake-to-screen contact area, and the rake is parked at the bottom between cleaning cycles. Any components that may require service are located above the water level for optimum access and convenience.

Why Flo-Screen™ out performs conventional bar screens:

- Above water level service provides optimum operator convenience
- Unique angled bars effectively retain solids, reduce turbulence and minimize head loss
- Greater screen surface area improves solids capture while maintaining opening
- Saw-tooth rake design increases rake-to-screen contact, minimizing grease buildup and increasing solids retention and removal
- Hydraulically driven rake is the only moving part below water level
- Ball bearing screw drive requires no maintenance
- Frame mounted hydraulic motor eliminates moving hoses and cables
- Fewer components reduce initial equipment costs, decrease spare parts inventory and minimize service requirements
- Top mount design provides simple drop-in installation eliminating costly channel modifications.
- Intrinsically safe by design
- Made in the USA

FLO-SCREEN XD™

Wastewater Screen

With all of the same features and benefits of the Flo-Screen™, the Flo-Screen XD™ adds the capability of discharging screenings at heights up to 35 feet.

Flo-Screen XD™

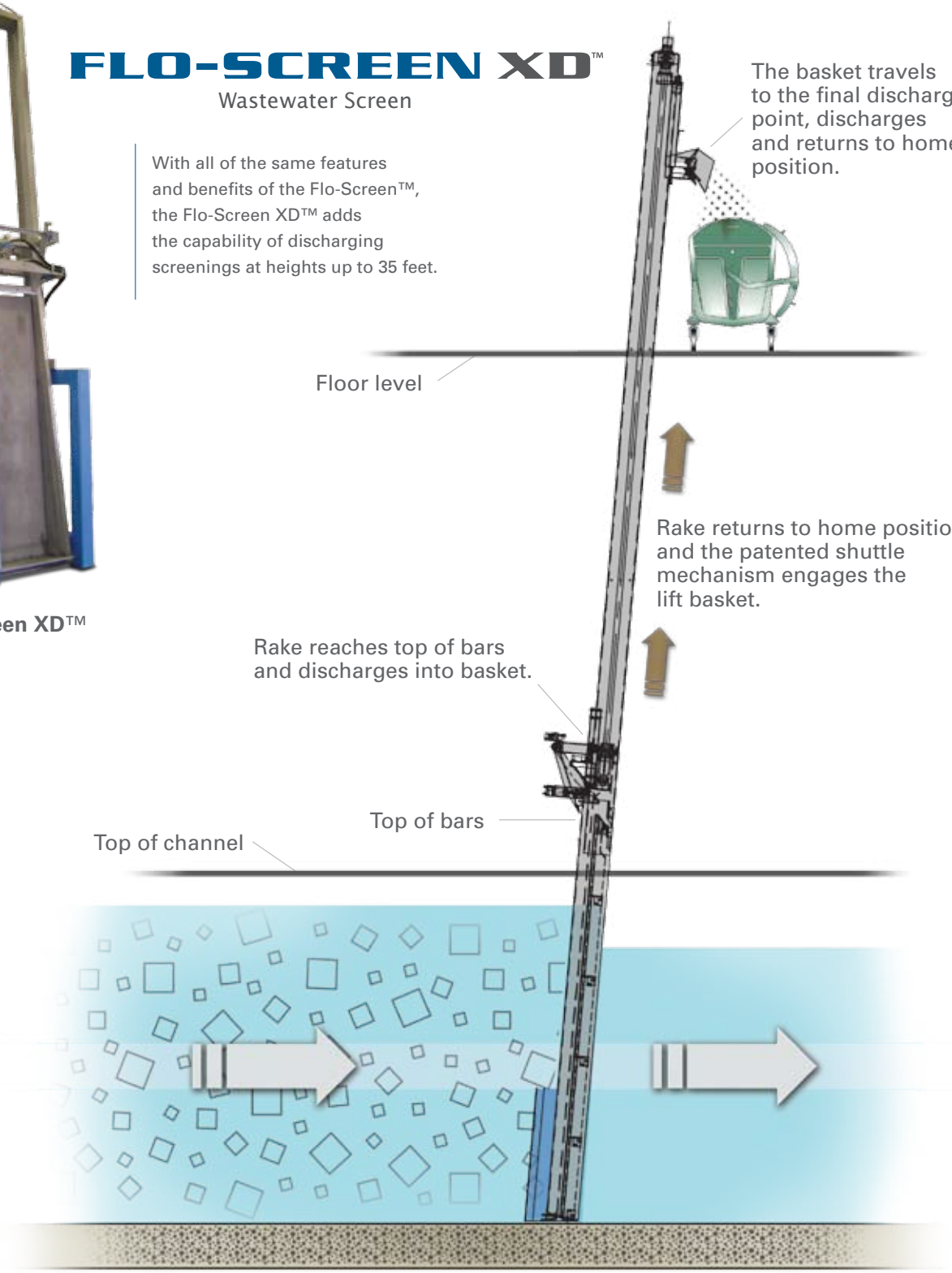

Flo-Screen XD™ specific features & benefits:

- Single screen widths up to 72″
- Accommodates flow rates from <1 MGD - >100 MGD
- Discharge heights up to 35′ from the bottom of the channel
- Standard 304ss construction, others upon request
- Bar spacing available from 1/4″ - 2″

Totally Focused on Headworks

Enviro-Care has been manufacturing solids reduction and wastewater screening technology since 1972, and many of our first units are still in service today. Our unique, patented designs are engineered for high process efficiency, reduced maintenance and low energy consumption. Our rugged, long life products are unsurpassed in quality and provide the most cost-effective solutions for your solids reduction and wastewater screening applications.

Flo-Minutor™ Channel Grinder

EC/SAVI™ Washer / Compactors

EC/SAVI™ Spiramatic™ Sieve Screen

EC/SAVI™ Septage Receiving Units

Enviro-Care
Keeping It Simple Since 1972

5701 Industrial Avenue
Rockford, Illinois 61111
www.enviro-care.com
p: 815-636-8306 f: 815-636-8302
ecsales@enviro-care.com